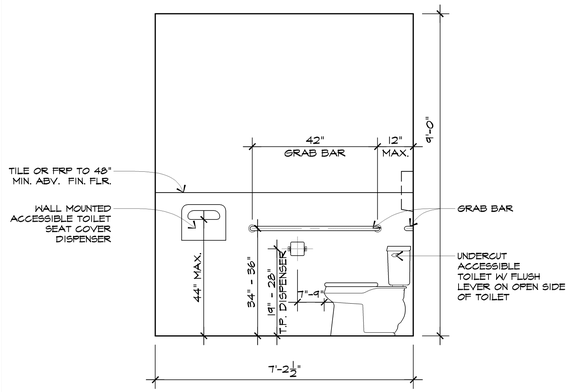

ELEVATION D

SCALE: 1/2" = 1'-0"

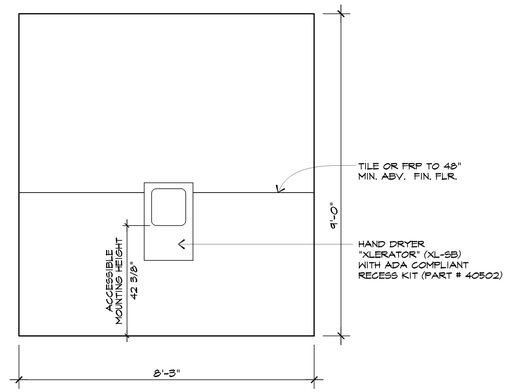

ELEVATION C

SCALE: 1/2" = 1'-0"

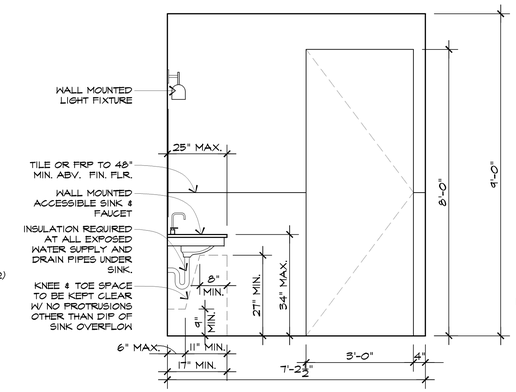

ELEVATION B

SCALE: 1/2" = 1'-0"

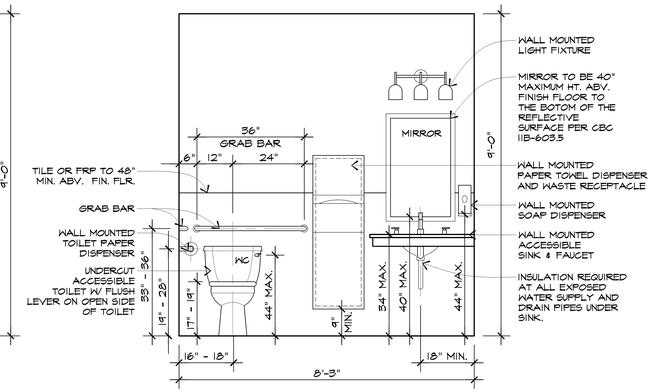

ELEVATION A

SCALE: 1/2" = 1'-0"

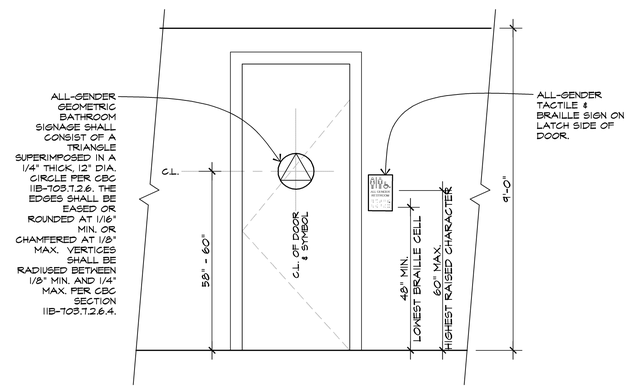

ELEVATION E

SCALE: 1/2" = 1'-0"

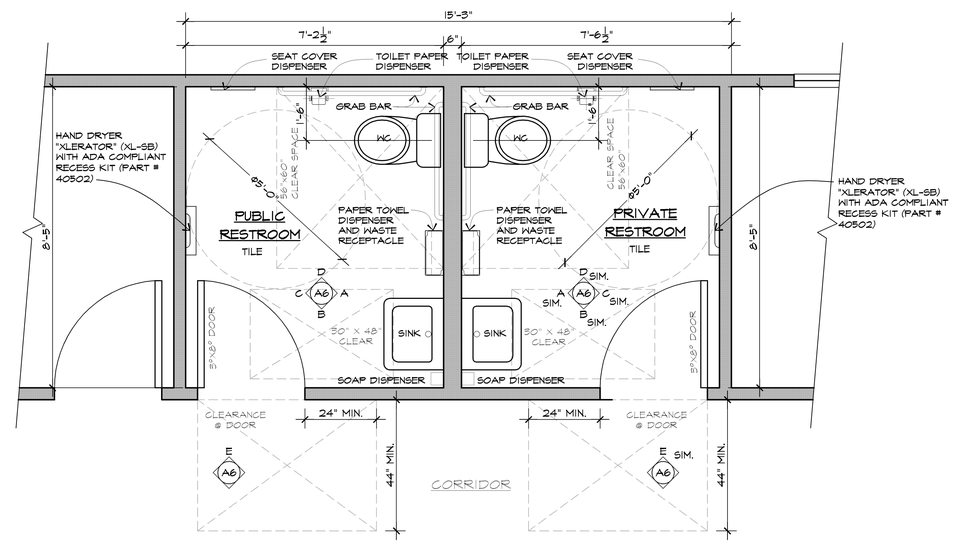

ENLARGED RESTROOM PLAN

SCALE: 1/2" = 1'-0"

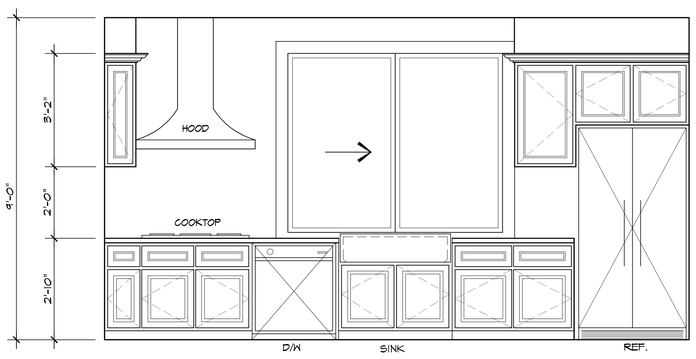

BREAK ROOM

SCALE: 1/2" = 1'-0"

REVISIONS	DATE

LICENSED ARCHITECT
WILLIAM A. WOOD
C 13874
Jan. 31, 2027
REN. DATE
STATE OF CALIFORNIA

BRENTWOOD CEMETERY OFFICE BUILDING

11545 BRENTWOOD BLVD.
BRENTWOOD, CA 94513

WILLIAM WOOD ARCHITECTS
301 HARTZ AVENUE, SUITE 203
DANVILLE, CALIFORNIA 94526
(925) 820-8233

THIS IS AN ORIGINAL, UNPUBLISHED WORK, AND MAY NOT BE DUPLICATED, PUBLISHED, OR OTHERWISE USED WITHOUT WRITTEN CONSENT OF WILLIAM WOOD ARCHITECTS.

COPYRIGHT © WILLIAM WOOD ARCHITECTS, 2025

DRAWN	JJ
CHECKED	WW
DATE	10/09/2024
SCALE	AS SHOWN
JOB NO.	24.2060C
SHEET	A12
OF	SHEETS

PLOT DATE: Aug 29, 2025 - 9:07am A12 Restroom Plan and Elevations.dwg